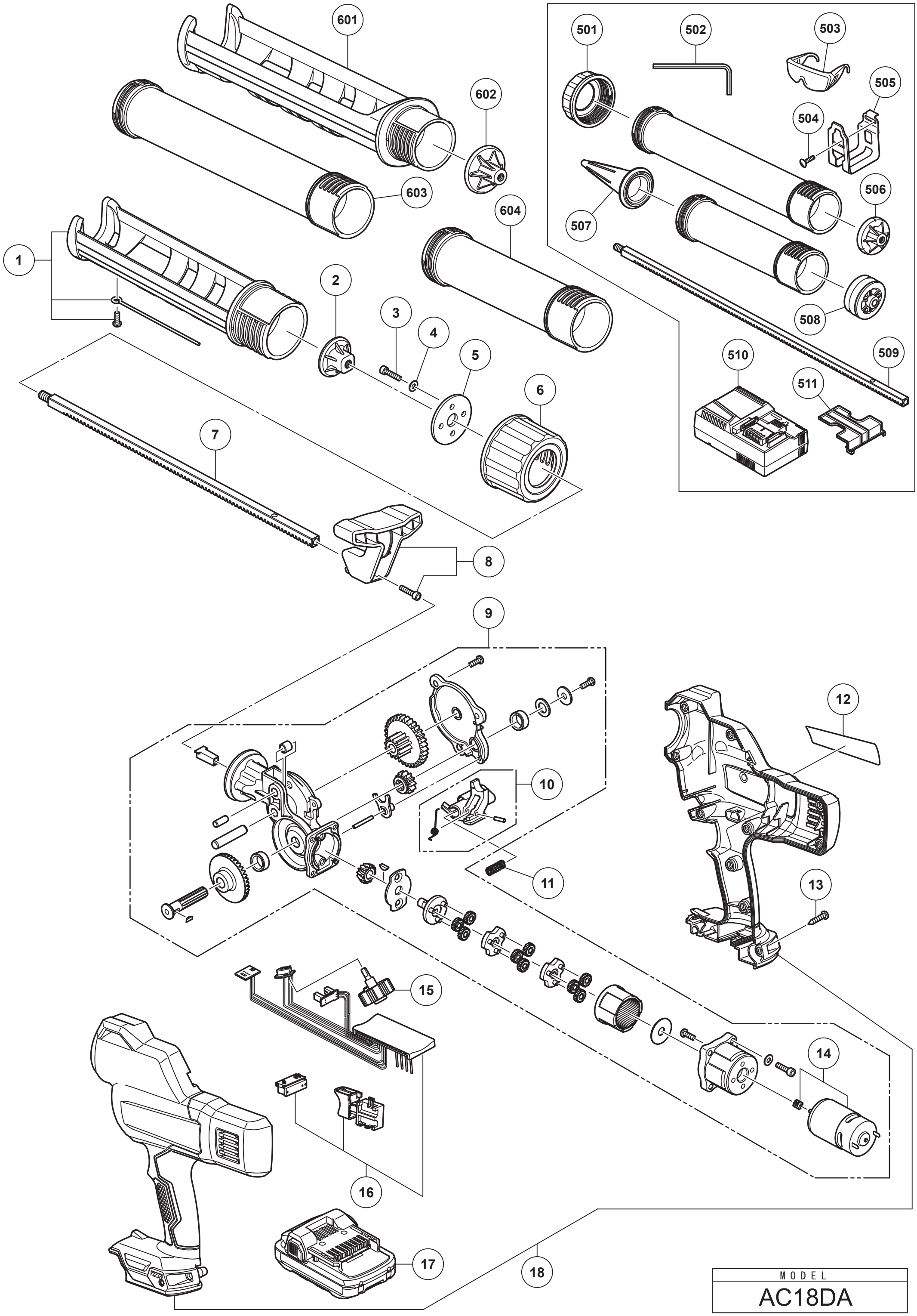

MODEL
AC18DA

Rev.1

HiKOKI

OEM AC18DA

Item No.	Code No.	Description	No. Used	Remarks
1	378873	HOLDER 300ML	1	
2	378863	CARTRIDGE PISTON	1	
3	378964	SCREW M5 SET (4 PCS.)	4	
4	378965	TOOTHED LOCK WASHER SET (4 PCS.)	4	
5	378966	NUT CLAMP	1	
6	378864	HOLDER NUT	1	
7	378865	PLUNGER ROD (300/400)	1	
8	378875	RACK HANDLE SET	1	
9	378874	GEAR MOTOR ASS'Y	1	INCLUD.10,14
10	378876	SIDE BUTTON	1	
11	378866	SPRING	1	
12		NAME PLATE	1	
13	378879	TAPPING SCREW SET (11 PCS.)	11	
14	378877	MOTOR	1	
15	378862	DIAL	1	
16	378878	SWITCH CONTROLLER SET	1	
17	377796	BATTERY BSL 1820M (EUROPE,AUS,NZL)	1	INCLUD.511
*18	378880	HOUSING SET	1	
		STANDARD ACCESSORIES		
501	378870	HOLDER CAP	1	
502	944458	HEX. BAR WRENCH 4MM	1	
503	875769	PROTECTIVE GLASSES	1	
504	373378	TRUSS HD. SCREW M4 (BLACK)	1	
505	373035	HOOK	1	
506	378868	SAUSAGE PISTON	1	
507	378871	NOZZLE	1	
508	378869	SUCTION PISTON	1	
509	378867	PLUNGER ROD (600/800)	1	
510		CHARGER (MODEL UC 18YSL3)	1	
511	329897	BATTERY COVER	1	
		OPTIONAL ACCESSORIES		
*603	378712	HOLDER SET 600ML	1	INCLUD.8,501,502,506-509
*604	378711	HOLDER SET 400ML	1	INCLUD.7,8,501,502,506-508 FOR EUROPE

* ALTERNATIVE PARTS